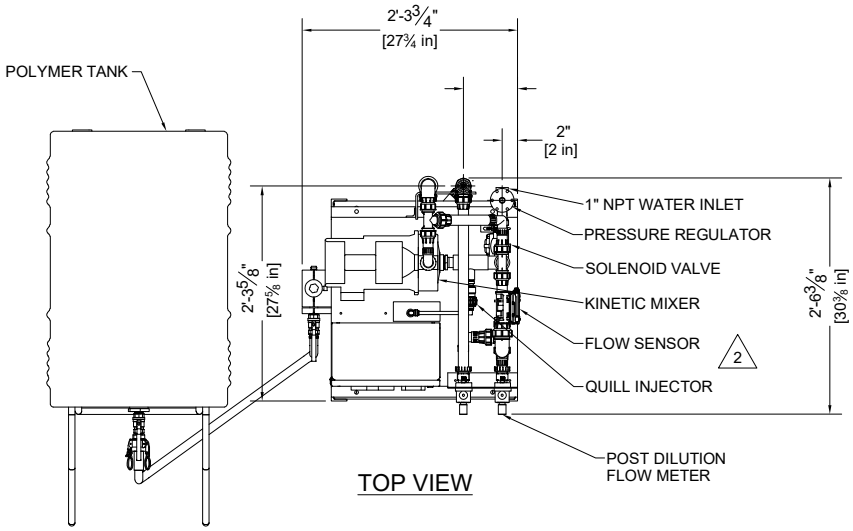

TOP VIEW

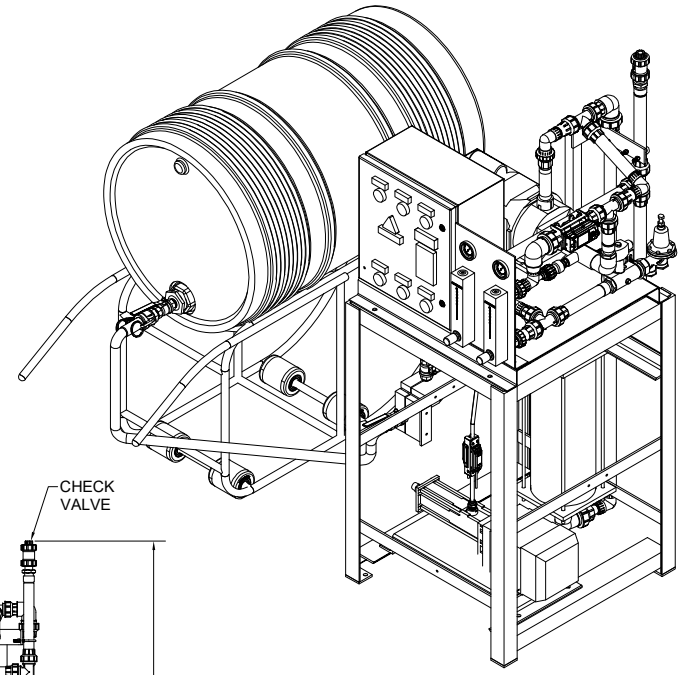

ISOMETRIC VIEW

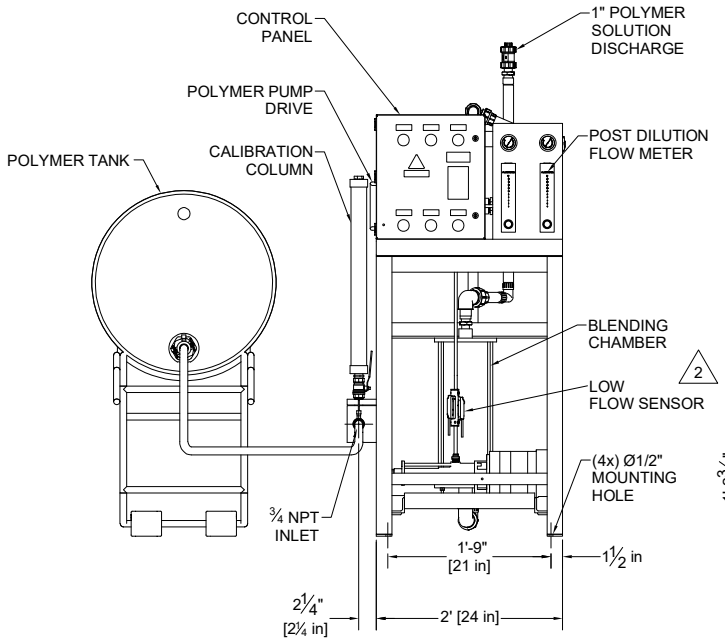

FRONT VIEW

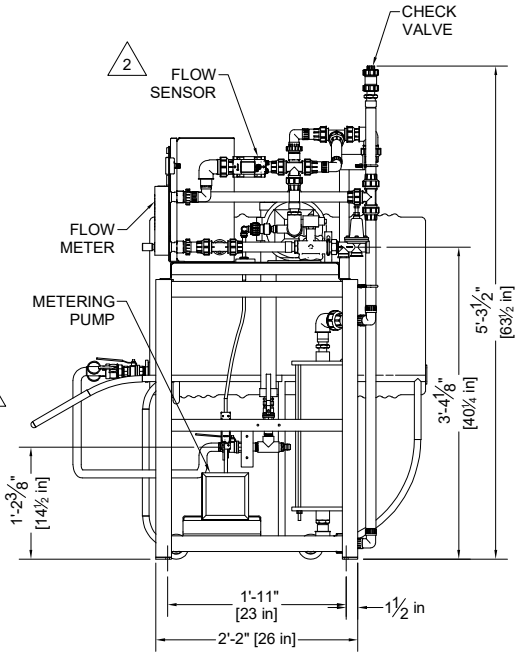

SIDE VIEW

DRAWN TMP		CHARTER MACHINE COMPANY 55 WESTER AVE METUCHEN N.J. 08840
APPROVED		
G.E.C. TOLERANCES UNLESS OTHERWISE SPECIFIED FRACTIONAL DIM ±1/64 DECIMAL DIM ±.005 ANGLE ± 1/2 SURFACE FINISH 125		TITLE ROEDOS L-2.30 POLYMER SYSTEM MACHINE VIEWS
		SIZE A · DWG NO. L230-B-002 · REV 2
		SCALE NONE · SHEET 1 OF 1

WEBSITE DOWNLOADS ARE FOR REFERENCE ONLY. CONTACT SALES FOR FURTHER INFO.

PROPRIETARY: EXCEPT AS OTHERWISE AGREED IN WRITING, THE INFORMATION AND DESIGN DISCLOSED HEREIN ARE THE PROPERTY OF THE CHARTER MACHINE COMPANY AND MUST NOT BE COPIED OR DISTRIBUTED OUTSIDE THE CHARTER MACHINE COMPANY EXCEPT TO AUTHORIZED PERSONS WITH A GENUINE NEED TO KNOW WHO BY THE USE HEREOF ACKNOWLEDGE CHARTER MACHINE COMPANY OWNERSHIP AND AGREE TO MAINTAIN THIS INFORMATION AND DESIGN IN STRICT CONFIDENCE.